Collection:Lyle

Installation manual for:

LD6246BK D8"H11" L1

Installation instructions:

1. Black wire from ceiling(junction box) attaches to "L"wire from the fixture.
2. White wire from ceiling(junction box) attaches to "N"wire from the fixture.
3. "E" wire from the fixture is attaced to the mounting bracket and an additional "E" wire from the mounting bracket must be secured to the junction box.
4. Secure mounting bracket to the junction box.
5. Insert screws（P4） in side of top unit the mounting bracket.
6. Put the canopy (P5) on the mounting bracket(P1) and tighten it with a nut (P6).
7. Install E26 light source,no include bulb.
8. Place the glass shade (P13) on the straight side disc (P11) and tighten it with a cap screw (P12).

The end!

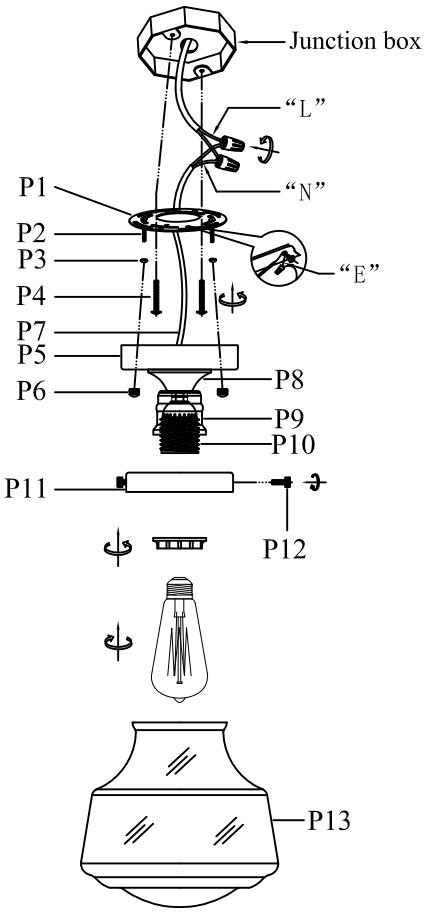

"L" = Hot wire
"N" = Neutral wire
"E" = Ground wire

PARTS LIST

part	picture	Description	Qty	Check list
P1		D4" Mounting bracket	1	
P2		5/32-32 Screw	2	
P3		Hex nut	2	
P4		5/32-32 Screw	2	
P5		D4.75" Canopy plat	1	
P6		Cap nut	2	
P7		Power Cord L2' 1332 18AWG Black&White	1	
P8		D2.6" Receiver bowl	1	
P9		D2" Socket cover	1	
P10		E26 Socket	1	
P11		D4.33" Straight edge disk	1	
P12		Cap screw	3	
P13		D8"*H7.5" Glass shade	1	