NOTES:

1. FIT / FORM / FUNCTION SHALL FOLLOW PS-E.008.

2 APPLY DOW CORNING 111

3 APPLY LOCTITE 680

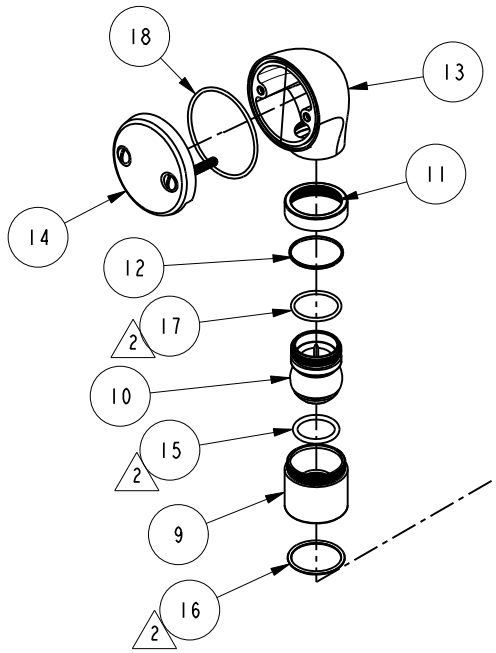

BILL OF MATERIAL (CURRENT LEVEL)

ITEM	PT/ASSY	DESCRIPTION	TYPE	QTY.
1	50241	WASHER TEE	PART	1
2	50242	TUBE, 1-1/2" X 3" X .040"	PART	1
3	50244	TUBE OVF 1.5 X 18 X .040	PART	2
4	50238	WASTE CAST'G 1-1/2	PART	1
5	91170	WASHER	PART	1
6	272	TOE ACTIVATED TUB DR	ASSEMBLY	1
7	91169	WSHR, 1.50 ID X 1.73 OD X .25 THK.	PART	2
8	50243	NUT SLIP JOINT 1-1/2	PART	3
9	51058	SOCKET - WASTE OVERFLOW	PART	1
10	51060	BALL JOINT - WASTE OVERFLOW	PART	1
11	51059	SCREW CAP - WASTE OVERFLOW	PART	1
12	91784	PLASTIC WASHER	PART	1
13	51061	DECORATIVE OVERFLOW HEAD	PART	1
14	266	W/O FACEPLATE W/2 SCRWS	ASSEMBLY	1
15	91631	O-RING, #2-216, EPDM, 65-75 DURO	PART	1
16	91256	O-RING, #2-128, EPDM, 65-75 DURO	PART	1
17	91227	O-RING, #2-125, EPDM, 65-75 DURO	PART	1
18	91547	O-RING, #2-147, EPDM, 65-75 DURO	PART	1

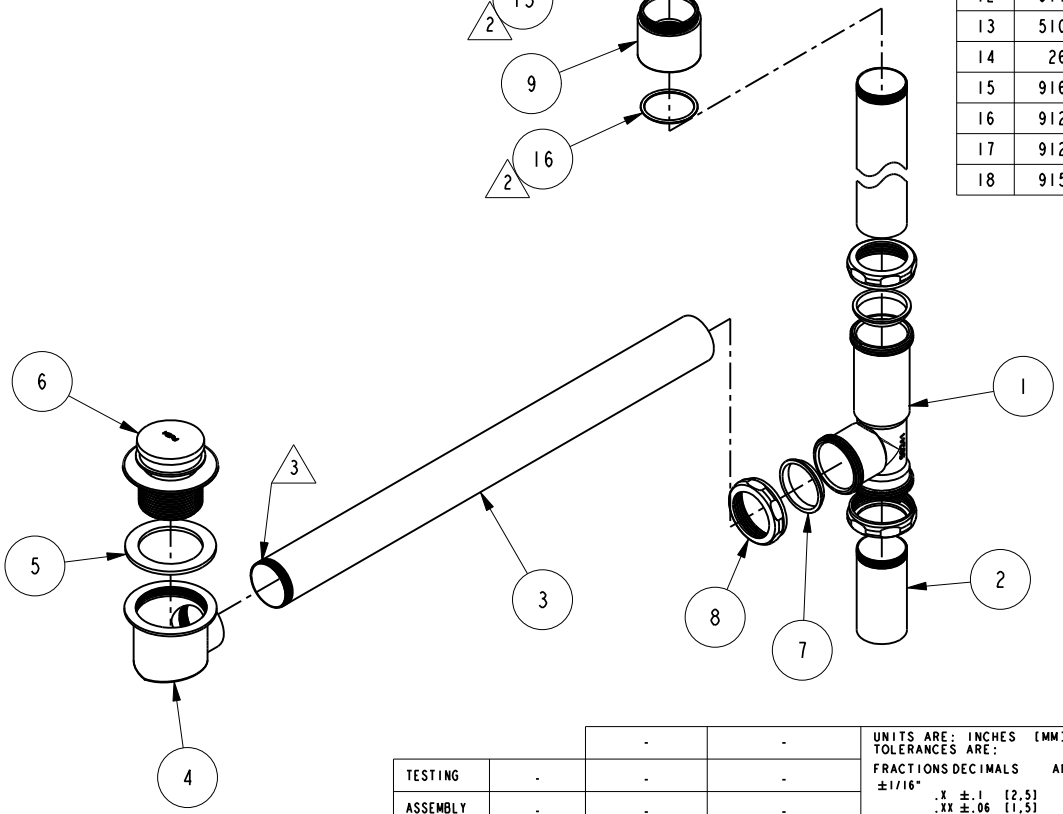

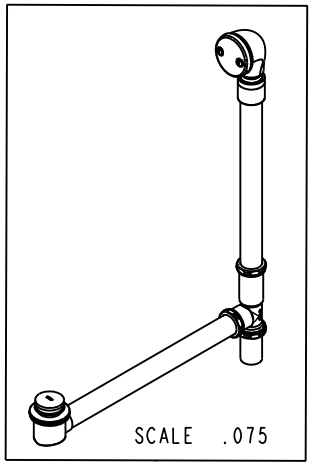

George Bazan Digitally signed by George Bazan Date: 2020.03.16 16:40:06 -07'00'

ZONE	REV	DESCRIPTION	DATE	APPROVED
-	A	EN-4138	03/13/20	J.M.
-	-	EN-3838	03/28/19	J.M.

COPYRIGHT 2005 BRASSTECH, INC. THESE DRAWINGS AND THE DESIGNS DEPICTED HEREIN ARE THE PROPRIETARY PROPERTY OF BRASSTECH. ANY USE OR REPRODUCTION IS SUBJECT TO THE EXPRESS APPROVAL OF BRASSTECH. UNAUTHORIZED USE IS STRICTLY PROHIBITED. ALL RIGHTS RESERVED.

		-	-
TESTING	-	-	-
ASSEMBLY	-	-	-
PLATING	-	-	-
POLISHING	-	NEXT ASSY	USED ON
MACHINING	-	APPLICATION	
TOOLING FIXTURE #		REMOVE ALL BURRS AND SHARP EDGES	

UNITS ARE: INCHES [MM]
TOLERANCES ARE:
FRACTIONS ±1/16" DECIMALS .X ±.1 [2,5] .XX ±.06 [1,5] ANGLES ±1°
(X.XXX) DENOTES CRITICAL DIMS.
ALL THREADS ARE CRITICAL

DRAWN	G.B.	03/22/19
CHECKED	-	-
APPROVED	-	-

BRASSTECH INCORPORATED
2001 CARNEGIE AVE.
SANTA ANA, CA 92705
(949) 417-5207

PIVOTING TOE ACTIVATED OVERFLOW

DWG NO. 111-2962 REV A

SCALE .175 REF. - SHEET 1 OF 2

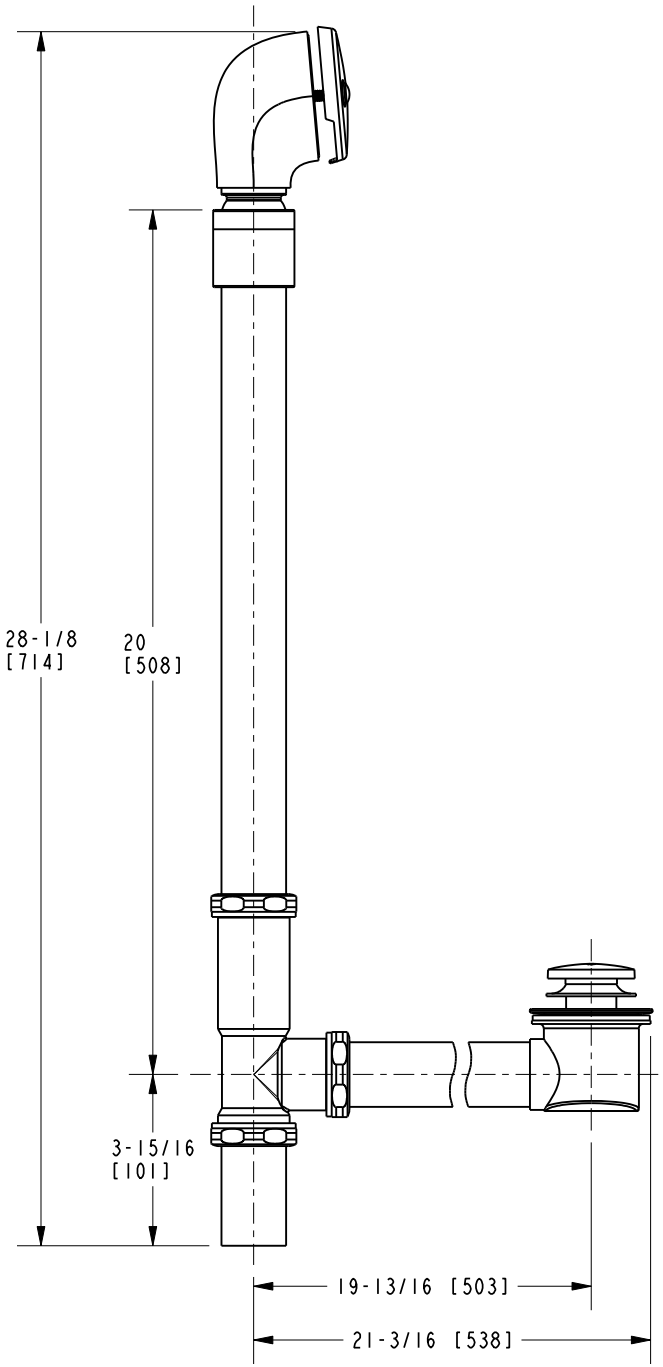

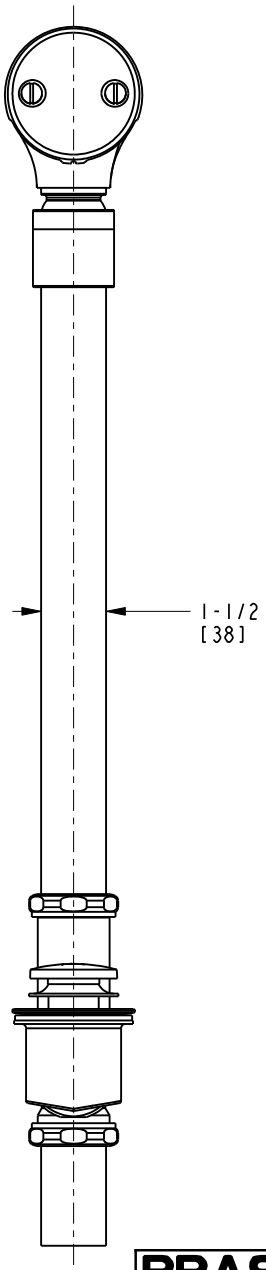

BRASSTECH INCORPORATED
2001 E. CARNEGIE AVE.
SANTA ANA, CA 92705
(949) 417-5207

DWG NO.	REV
111-2962	A

SCALE	REF.	SHEET
.225	-	2 OF 2