MEDIC-AID® HEAVY-DUTY PLASTIC TOILET SEAT

MODEL #	COLOR #
MA2150T	_____

DESCRIPTION:

Open front with cover, elongated, heavy-duty, injection molded solid plastic toilet seat. Features four molded-in bumpers, stainless steel side arms with textured plastic grips with finger grooves, check hinges with non-corrosive 300 Series stainless steel posts and pintles and STA-TITE® Commercial Fastening System™. Seat contains DuraGuard® Antimicrobial* Built-In Seat Protection™. This seat complies with IAPMO/ANSI Z124.5-2013 Plastic Toilet Seats as a class Commercial Heavy Duty. Side arms are ADA tested to 250 pounds.

* DuraGuard® Antimicrobial does not protect users against bacteria, viruses, or other disease organisms. Always clean and wash this product thoroughly before and after each use.

SPECIFICATIONS:

Size:	Elongated
Material:	Plastic
Style:	Open Front with Cover
Bumpers:	Four
Hinges:	Plastic with 300 Series Stainless Steel Posts and Pintles
Fastening System:	STA-TITE® Commercial Fastening System™

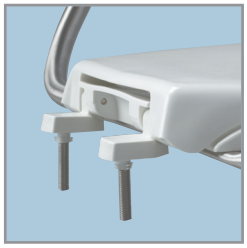

PLASTIC HINGES WITH STAINLESS STEEL POSTS AND PINTLES

STA-TITE® COMMERCIAL FASTENING SYSTEM™

FEATURES:

STA-TITE® Commercial Fastening System™

DuraGuard® Antimicrobial Built-In Seat Protection™

ADA Tested Stainless Steel Safety Side Arms

Non-Corrosive 300 Series Stainless Steel Posts and Pintles

DIMENSIONS:

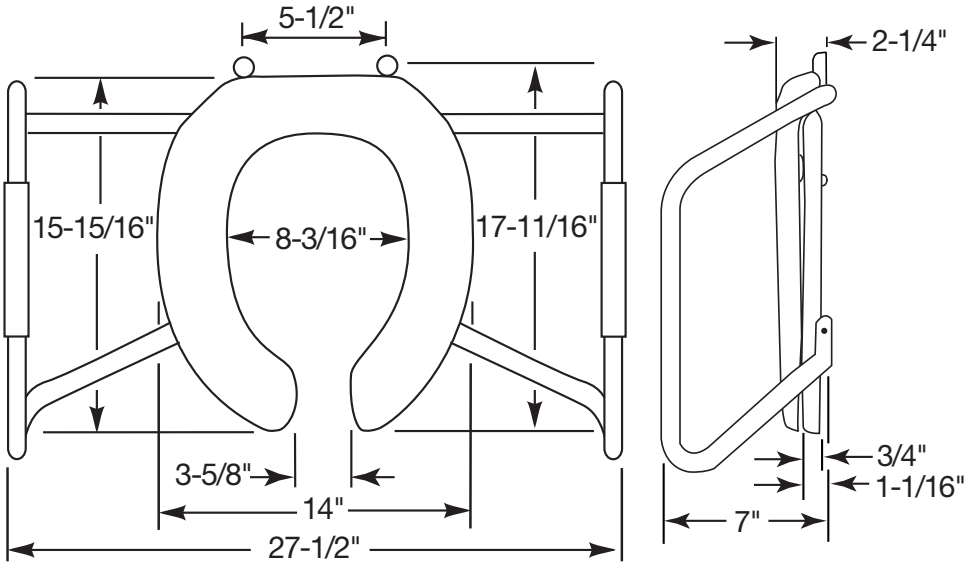

Proudly Made in the USA

Bemis Manufacturing Co., Sheboygan Falls, WI 53085
www.ToiletSeats.com
Phone: 800-558-7651 Fax: 800-292-3647